VX5040002

Edgesafe Systems

vertemax™

Name: V - Foot 1
Weight: 3.7 lbs
Standard: EN 13374-A; CCOHS; OSHA; ANSI/ASSE
Material: Galvanized Steel Dimensions: Imperial

This Technical Document must always be used in conjunction with **vertemax's General Qualifications** -See below

1. Always plan your work and installation
2. Always select the right equipment
3. Always regularly inspect your system

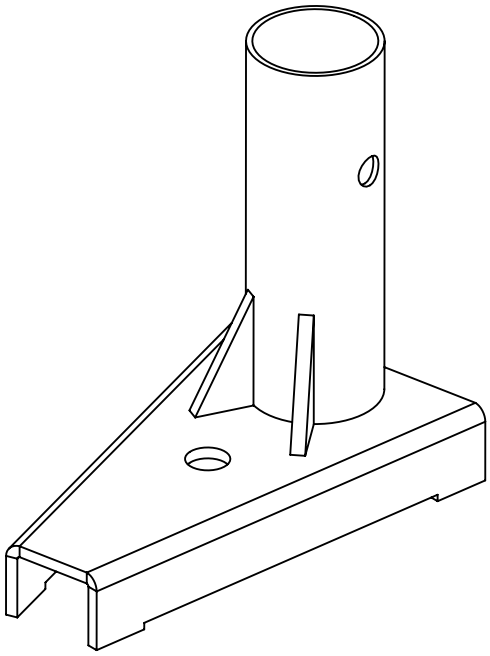

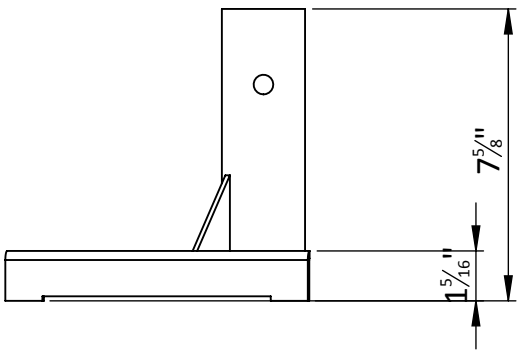

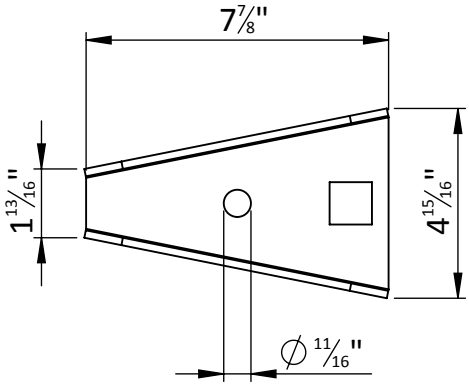

©vertemax

1.

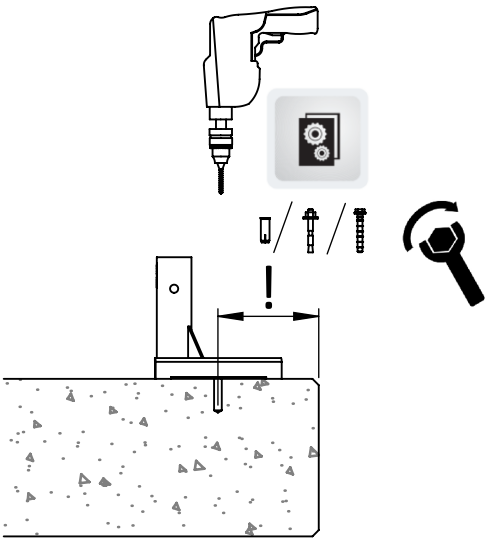

2.

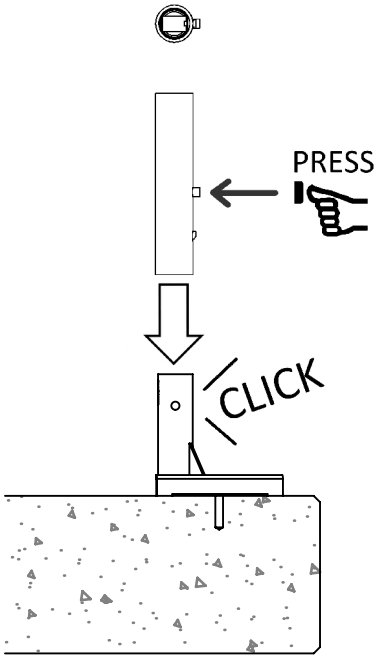

3.

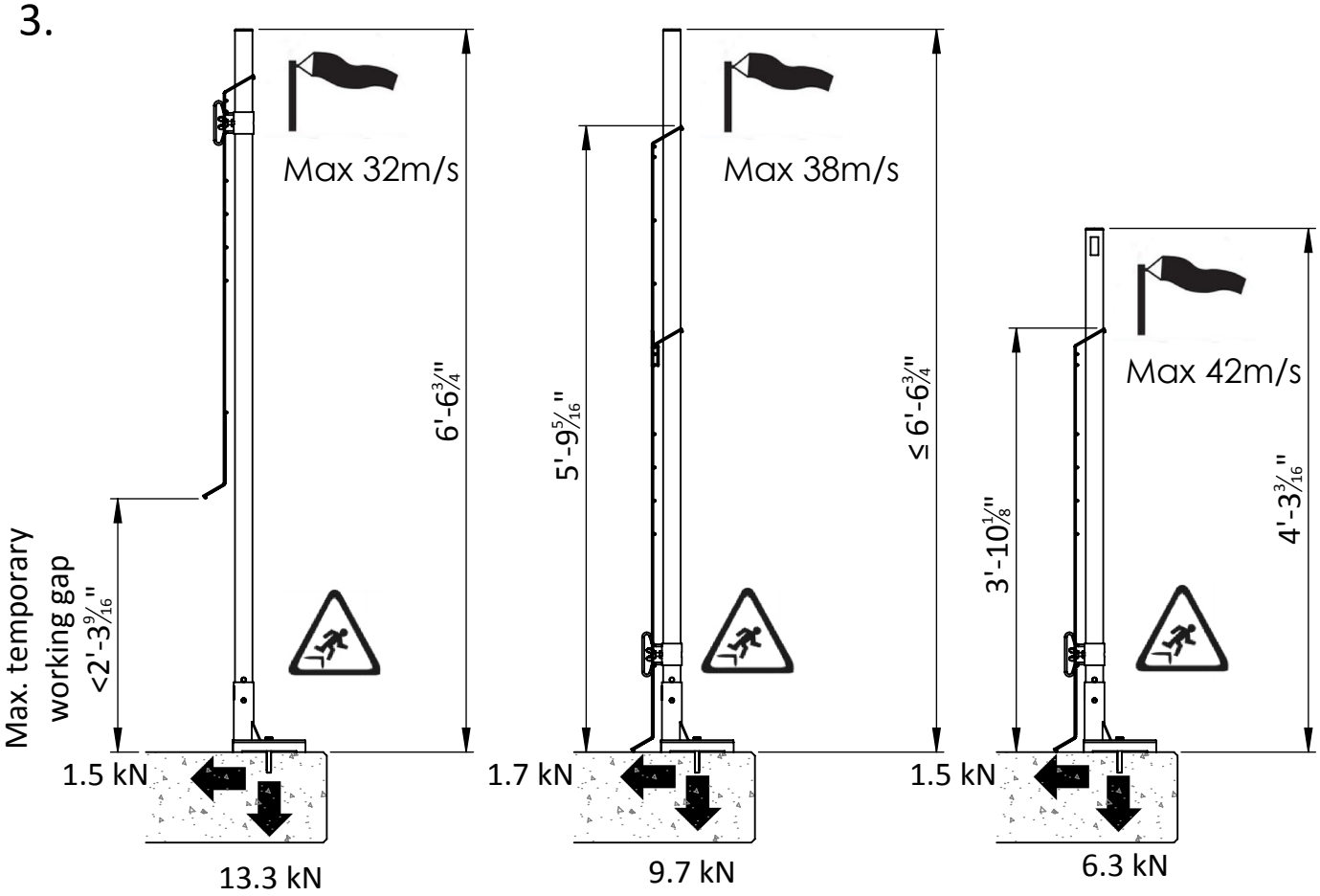

©vertemax

4.

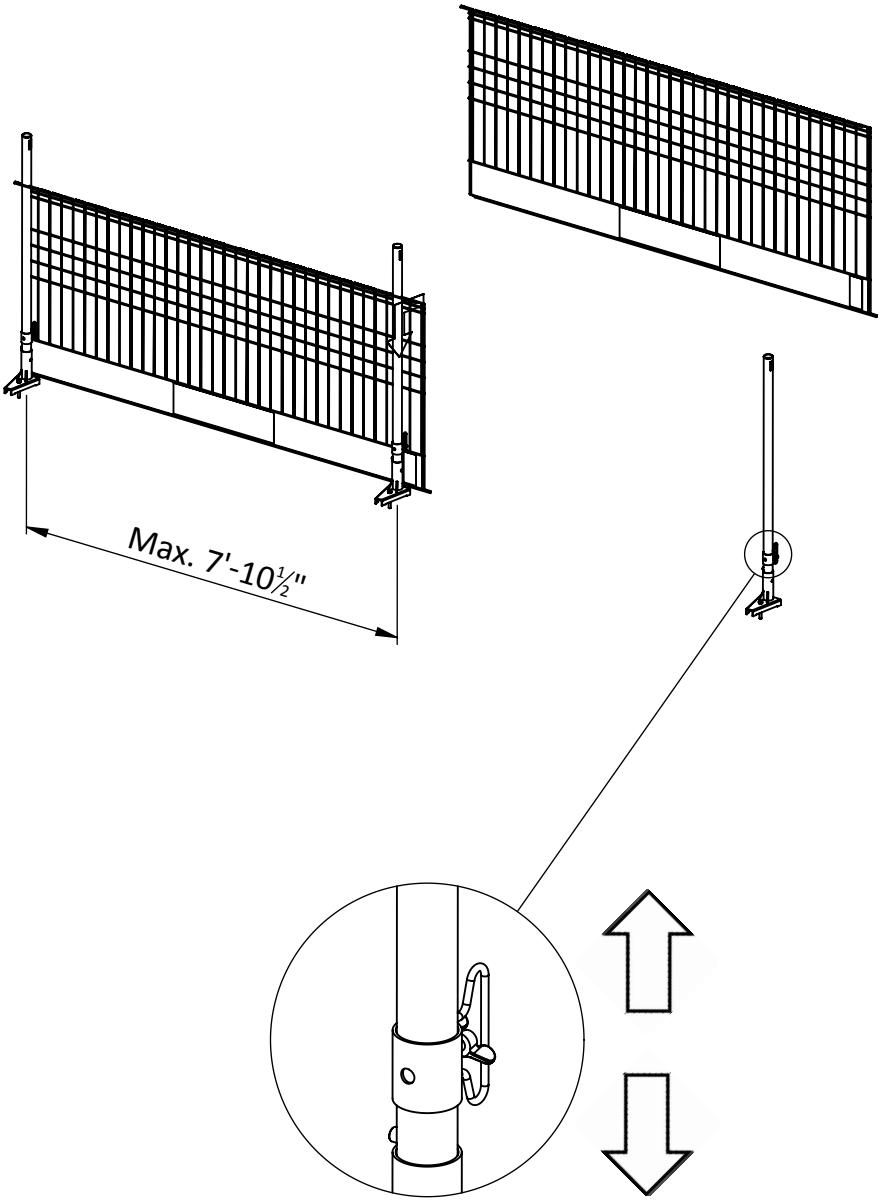

General Qualifications

These General Qualifications are applicable to all vertemax products and must always be read in conjunction with each products Technical Documentation (TD).

General
• Always check general product condition before use • If in doubt always ask by contacting a representative of vertemax • Reject any damaged or rusty components • vertemax products and systems provide temporary protection during construction activity. • vertemax products are NOT tested or intended: - to withstand impact by any vehicle, - to support or provide control of the public, - for the containment of bulk materials.
Always Plan your works
• Take note of location, proximity to permanent and temporary hazard structures. • Take note of dimensions, layout and access areas. • Always identify both the fall hazard for the installer and the falling materials hazard for persons and property below. • These identified hazards should also be considered on dismantling. • vertemax strongly recommends seeking competent Work at Height advice if in any doubt about the installer's or other's safety. • Note the component weight as given on the TD sheets and ensure suitable handling equipment is available. • Ensure local site Risk Assessment / Method Statement detail is observed and followed.

Authorized Distribution by:
Edgesafe Systems Ltd.

Telephone 778.897.0797
sales@edgesafesystems.com

Toll Free 1.855.232.1416
www.edgesafesystems.com

Fixing selection
• All fixings should be confirmed as suitable for the chosen application site. • Material type and thickness, edge proximity, depth of embedment, and proximity to other fixings, all impact the strength of a fixing. Please refer to manufacturer's instructions for fixing guidance and limitation. • The dimensions for installation and the load capacity should be confirmed by the fixing manufacturer for each application. • Competent fixings advice should be sought if in any doubt.
Fine mesh containment
• Note that the addition of any fine containment mesh (such as on barriers or safety nets) increases the wind load attracted to the supports. • Technical advice must be sought before any such addition.
Weather
• vertemax products and systems can be adversely impacted by significant wind speeds. Please note limitations on product TD and take any recommended remedial action. If in doubt, contact a vertemax representative. • If in doubt, cease work, and use additional protection measures as required. • All safety systems should be kept clear of ice and snow.
Inspection
• All installed systems should be checked at least once every 7 days by a competent person, to ensure its continued integrity and that there are no signs of any potential failing. • We recommend that these checks are recorded in a site log. • Please ensure any defective product identified during inspection is replaced immediately.
Loading
• Any vertemax products subjected to loading, or used in anger, should be assessed to ensure it continues to provide the necessary protection. If this involves removing from service you must ensure the area is otherwise protected. • The system should then be fully inspected, any components replaced as necessary, and the installation confirmed as fit for continued use by a competent person.
Storage
• vertemax recommends the use of its own storage and transit solutions. • Take careful note of lifting and loading limits. • All components should be stored in a manner that limits any detrimental environmental effect due to weather or corrosive substances.
Traceability
• All vertemax products are traceable.

Key		
	Symbol	**Meaning**
1.		Tech Data
2.		If in doubt, check online @ www.edgesafesystems.com
3.	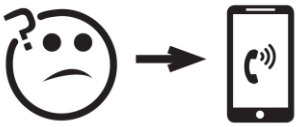	If in doubt call Edgesafe Service Department on +1-855-232-1416
4		Always Check/ Always confirm
5		Fall Hazard
6		Do this
7		Don't do this
8		Be Aware
9		Recycle damaged materials
10	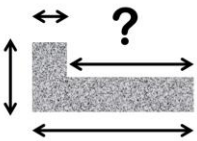	Recommended Distance

Authorized Distribution by:
Edgesafe Systems Ltd.

Telephone 778.897.0797
sales@edgesafesystems.com

Toll Free 1.855.232.1416
www.edgesafesystems.com

11		Secure yourself against falling
12		Protect those below from falling equipment
13	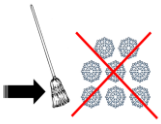	Catch fan – Keep Clean from snow
14	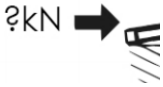	Sheer Load
15		Tensile Load
16		Moment Load
17		Max Wind Load
18		Check Weekly
19	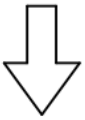	Insert
20		Install
21	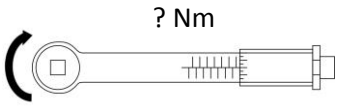	Torque Spanner and settings

Authorized Distribution by:
Edgesafe Systems Ltd.

Telephone 778.897.0797
sales@edgesafesystems.com

Toll Free 1.855.232.1416
www.edgesafesystems.com

22		Flat Head Screwdriver
23		Cross Head/Phillips Screwdriver
24		Tighten
25		Untighten
26		Tighten by hand
27	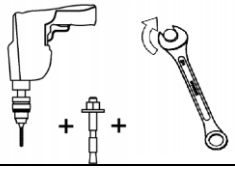	Drill and Select appropriate anchor
28		Floor/General
29		Concrete slab/floor
30	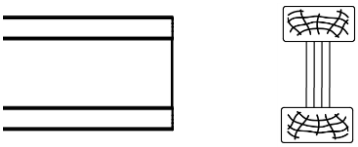	Timber Beam
31	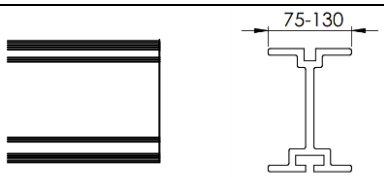	Alu Beam

Authorized Distribution by:
Edgesafe Systems Ltd.

Telephone 778.897.0797 **Toll Free 1.855.232.1416**
sales@edgesafesystems.com **www.edgesafesystems.com**